REV	DESCRIPTION	ECO #	DFT	CHK	ENG	DATE
	ADDED LABELING SPECIFICATIONS (NOTE 6)		MA			12/7/07

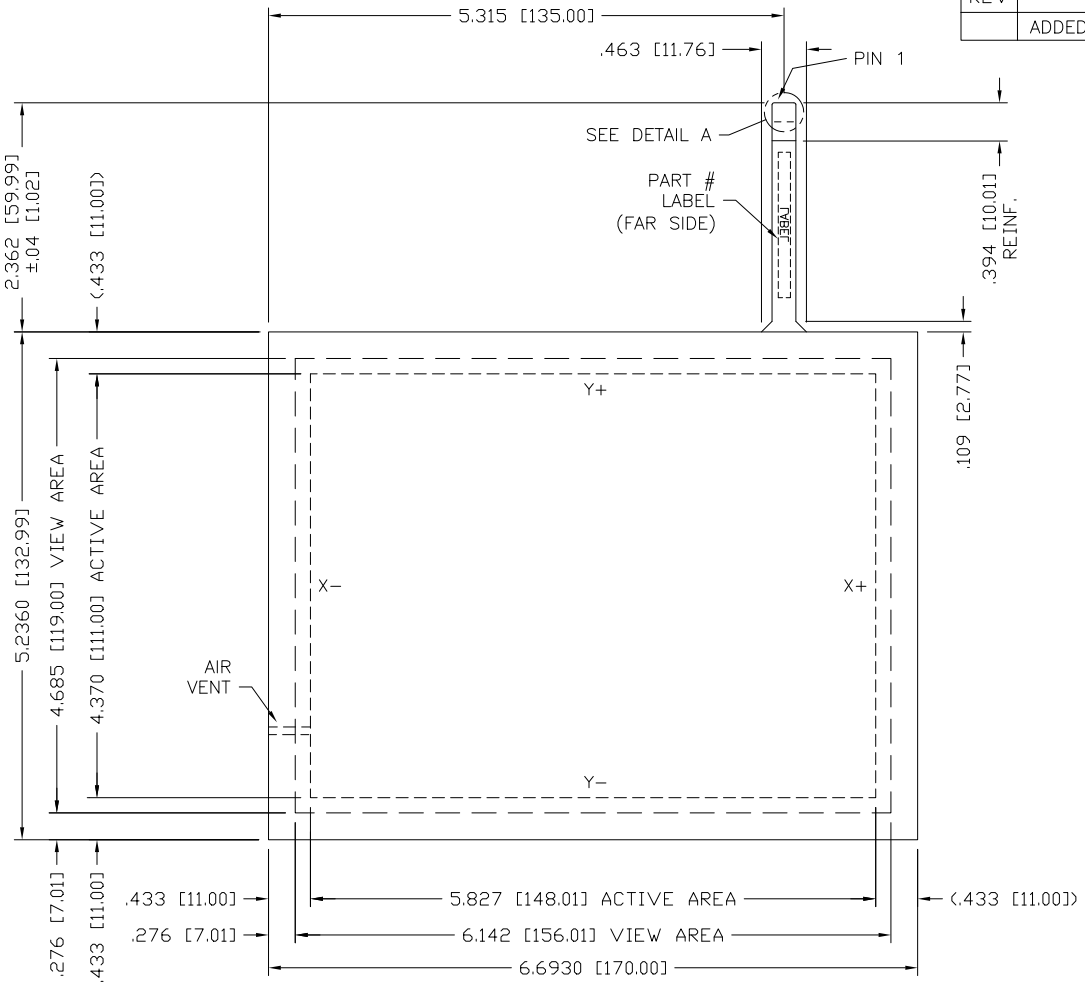

'TOUCH SIDE' VIEW

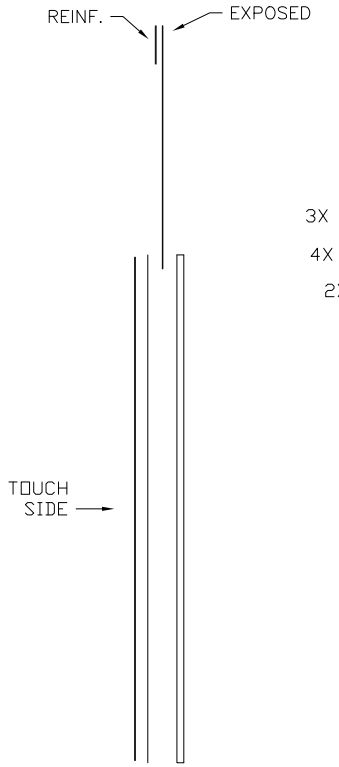

STACK-UP

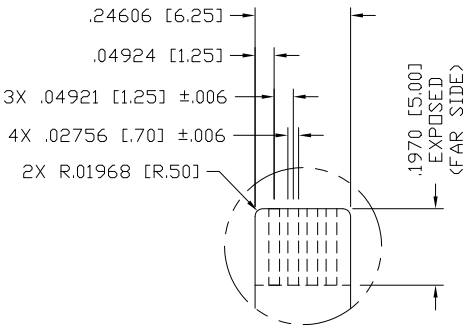

DETAIL A
4/1

PINOUT	
PIN	DESCRIP
1	X−
2	Y+
3	X+
4	Y−

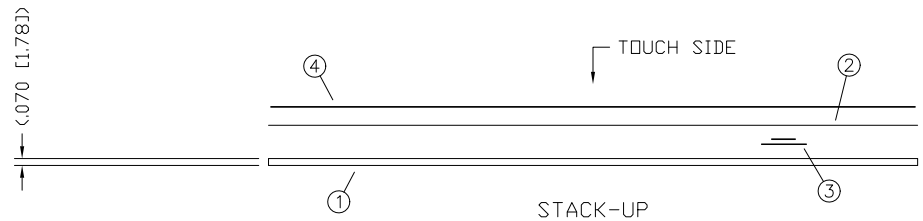

STACK-UP

QTY	ITEM NO	PART NUMBER	DESCRIPTION
1	4		TOPSHEET SUBASSY (AG)
1	3		TAIL SUBASSY .012 [0.3] THK @ EXPOSED
1	2		GASKET SUBASSY
1	1		BOTTOMSHEET SUBASSY (GLASS) .070 [1.8] THK

FINISHED PART #

NEXT ASSY #

NOTES:

1. TOPSHEET FINISH: ANTI-GLARE
2. SPACER DOTS: .006 [.15] X .160 [4.06] SPACING, PEN/FINGER INPUT (NOT SHOWN)
3. TOTAL THICKNESS: .083 [2.10] ±.006 [.15]
4. FLEXTAIL: DO NOT BEND TO LESS THAN 1/8" RADIUS
5. MATING CONNECTOR: 1.25MM PITCH ZIF
6. LABEL: SERIAL#, PART# & REV. (FAR SIDE OF TAIL)
   LABEL: TI LABEL SPEC # 6600099 TYPE 1, SIZE SMALL (LOCATE APPROX. WHERE SHOWN)

DO NOT SCALE DRAWING !

UNLESS OTHERWISE SPECIFIED, DIMENSIONS ARE IN INCHES. REMOVE ALL BURRS AND BREAK SHARP EDGES.

DEC. TOLERANCE:
.XX = ±.060 UNO
.XXX = ± .020 UNO
.XXXX = ± .012 UNO
.XXXXX = ±.008 UNO

FRAC. TOL. X/X = ±1/16
ANGULAR TOL. = ±1°

NOTICE OF PROPRIETARY RIGHTS

THIS DOCUMENT, AND THE INFORMATION IT CONTAINS, IS PROPRIETARY TO TOUCH INTERNATIONAL. IT MUST NOT BE DUPLICATED, OR ITS CONTENTS USED OR DISCLOSED (IN WHOLE OR IN PART) WITHOUT WRITTEN PERMISSION FROM TOUCH INTERNATIONAL.

DRAWN jh DATE 6/04

SCALE: NTS

SHEET 1 OF 1

TOUCH INTERNATIONAL
2222 West Rundberg Ln #100
Austin, Texas 78758
512-832-8292

TITLE:
SENSOR RES 4W
7.2 DIAG

SIZE A | DWG. NO. 48-F-4-72-001 | REV. 2.1

ACAD